European Filigree Pen Kits Assembly Instructions

REQUIRED ACCESSORIES:

• 7mm Pen Mandrel
• 7mm Drill Bit RZ-DB007
• 4pc Bushing Set RZ-BP75#-BU
• 7mm Barrel Trimmer or Universal Barrel Trimmer Set
• 2 part epoxy glue or insta-cure (cyanoacrylate)

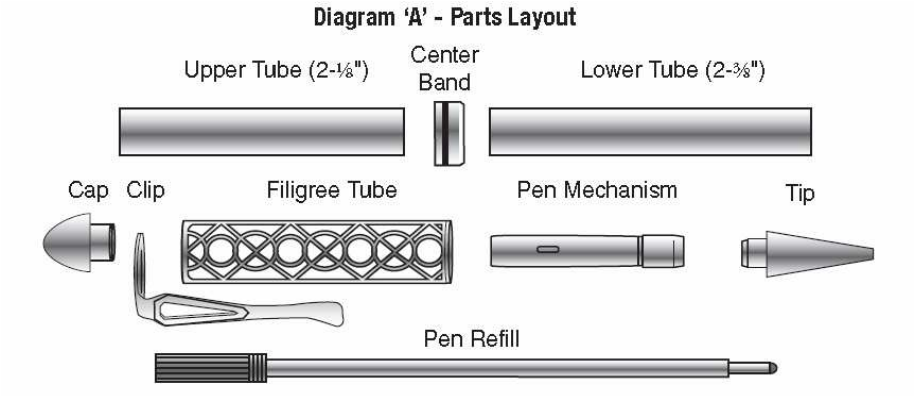

PREPARING THE BLANKS:

1. Cut 5/8" square or larger blanks to the length of the brass tubes (add 1/16" for squaring off).
2.Drill a 7mm-centered hole lengthwise through each blank.
3. Spread glue over the tubes; insert into the blanks with a twisting motion to spread the glue evenly inside. Center the tubes lengthwise inside the blanks.
4.When the glue dries, square the ends of the blank. Use a 7mm barrel trimmer to take the wood down flush to the brass tubes.

TURNING THE BLANKS:

1. Place spacer bushings onto the mandrel. Place the tip bushing on next, follow with the lower (longer blank). Then place the center bushing on small diameter on first. Follow with the upper blank (shorter). Place the cap bushing on next. Screw on the lock nut hand tight. Bring the tailstock into the mandrel. Lock into place. Tighten the lock nut (do not overtighten, it may damage the mandrel).
2. Turn the wood down to the diameter of the bushings using chisels and abrasives. Taper the lower blank. Follow diagram 'B' for profile. Form a straight line between the bushings on the upper barrel. Test to be sure the filigree tube fits snug over the barrel. Finish the barrels.

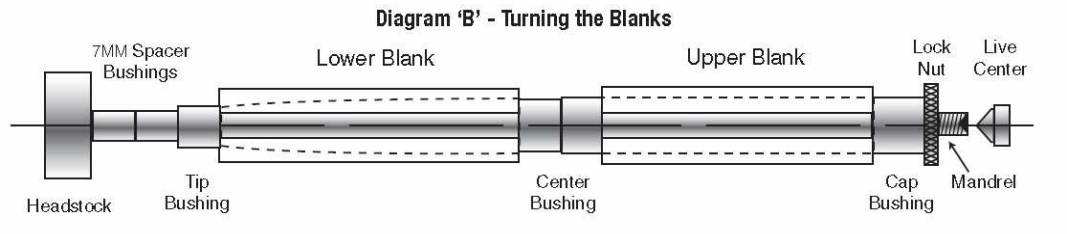

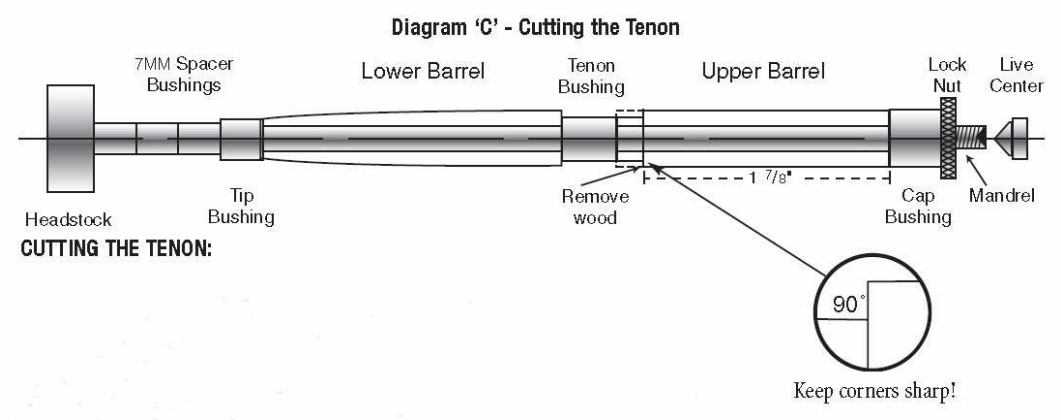

3.Unlock the set up and remove the center bushing. Replace with the tenon bushing. Remount the upper barrel and reset for turning.
4. Pencil mark 1 - 7/8" from the cap bushing. Turn the wood down to the diameter of the bushing. Keep sharp 90° corners on both corners; see diagramC.

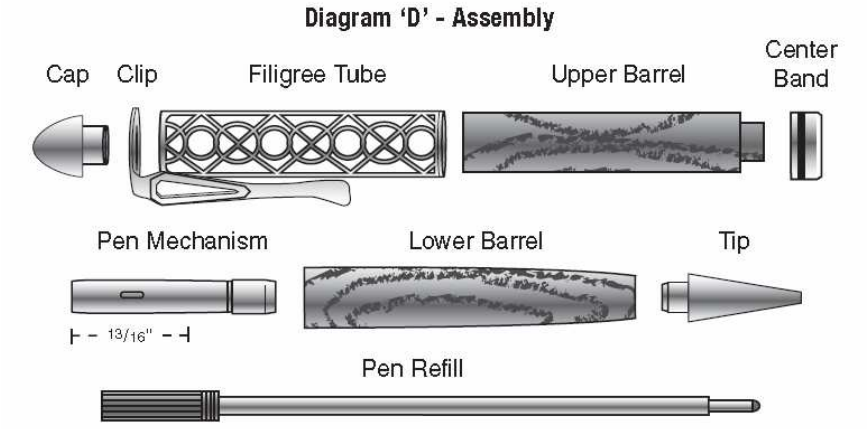

ASSEMBLY:

1. Line up the finished parts according to diagram 'D'.
2. Press the tip into the tapered end of the lower barrel.
3. Press the mechanism, brass end in first into the opposite end of the barrel. Stop before 13/16" of chrome is showing outside the barrel.
4. Insert the refill into the mechanism, thread in. Test the extension of the refill. Adjust in if necessary.
5. Squeeze a drop of glue on the tenon. Place the band, square end on first over the tenon, let dry.
6. Slide the filigree tube over the barrel.
7. Insert the cap into the clip, press this assembly into the barrel over the filigree tube.
8. Engage and push barrels together. Pen operates by twisting the barrels to extend or retract the writing tip.